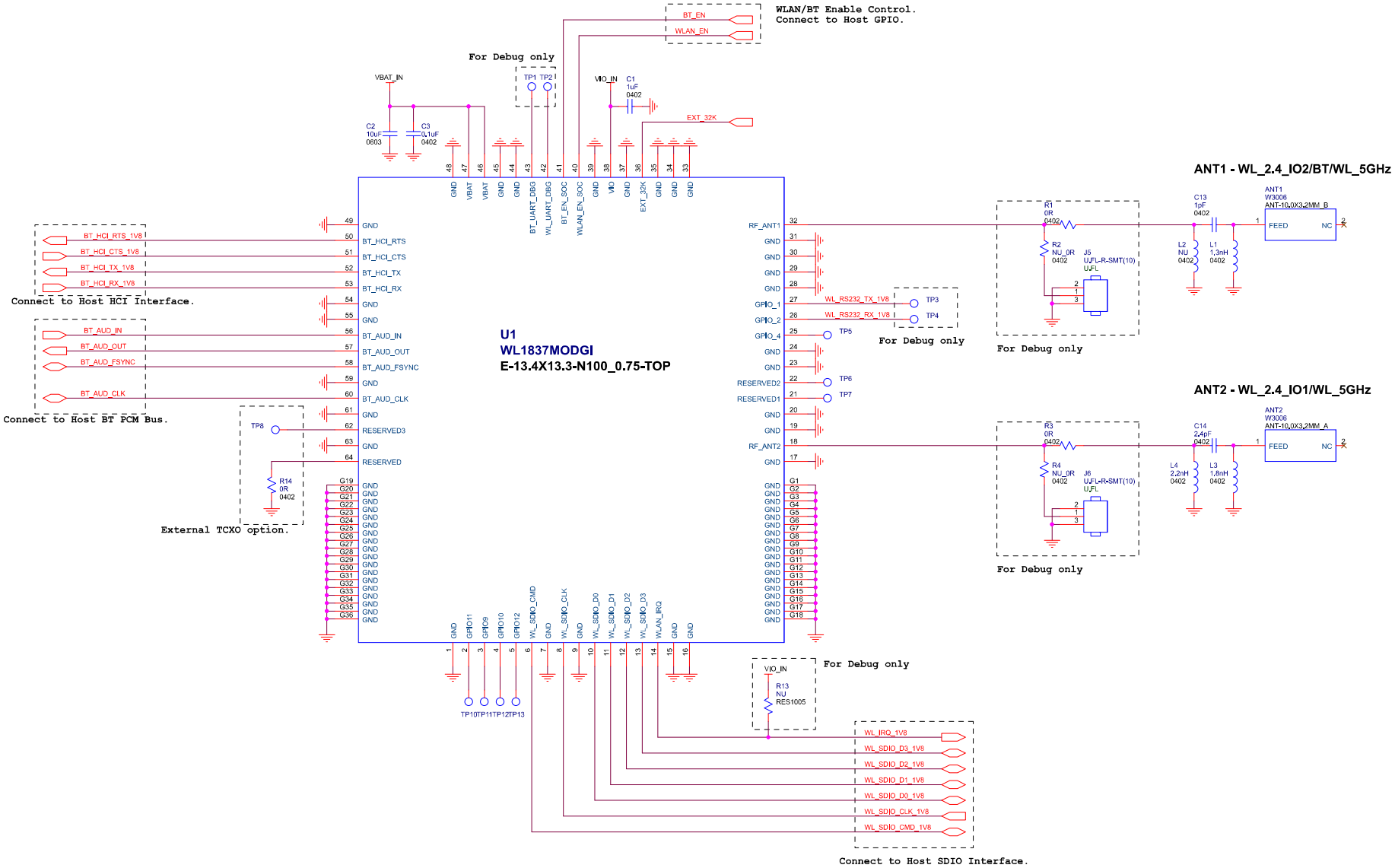

Figure 7-1. TI Module Reference Schematics